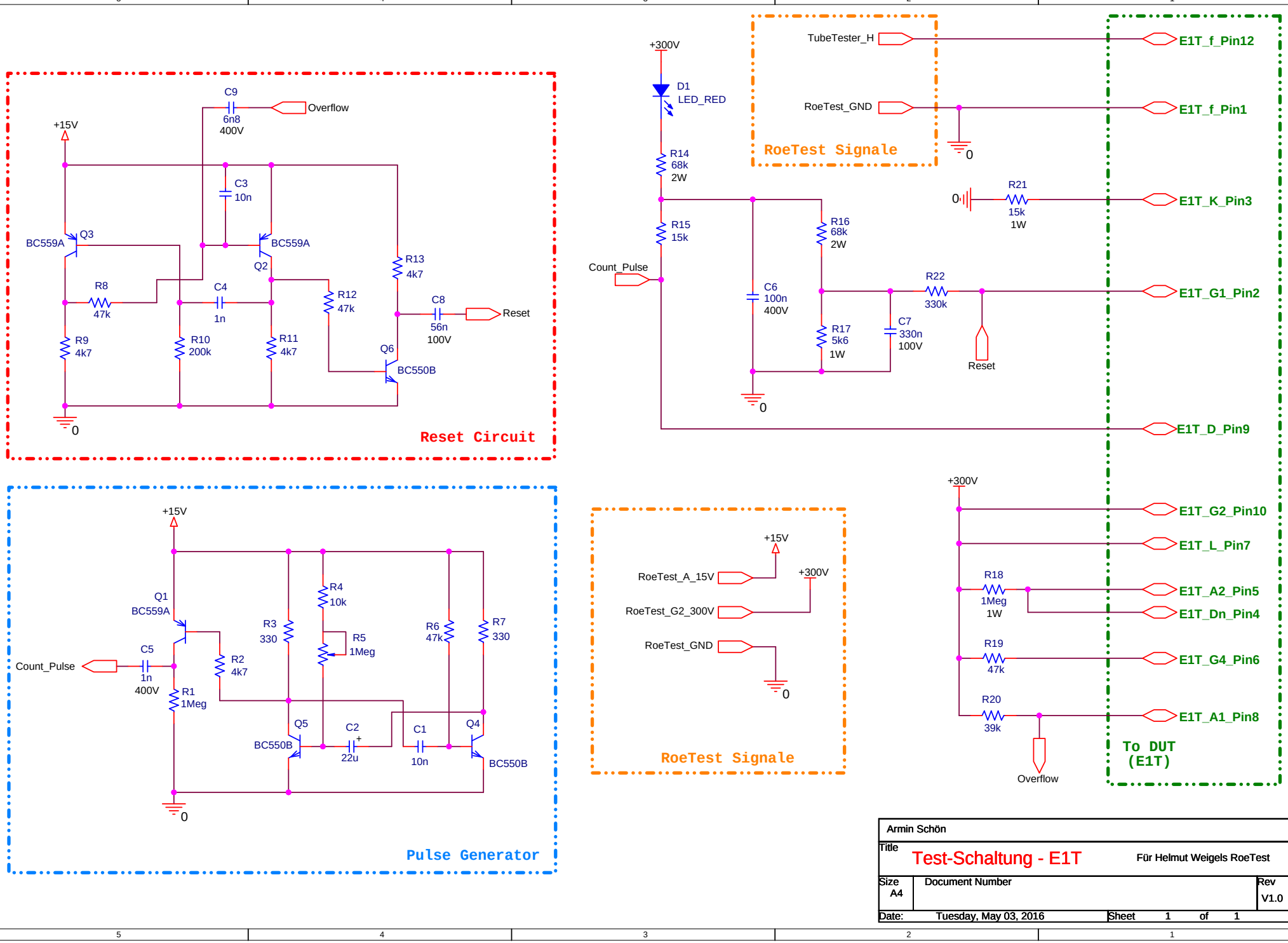

Armin Schön		
Title: Test-Schaltung - E1T	Für Helmut Weigels RoeTest	
Size: A4	Document Number	Rev: V1.0
Date: Tuesday, May 03, 2016	Sheet 1 of 1	